bdd G05 [PBS]

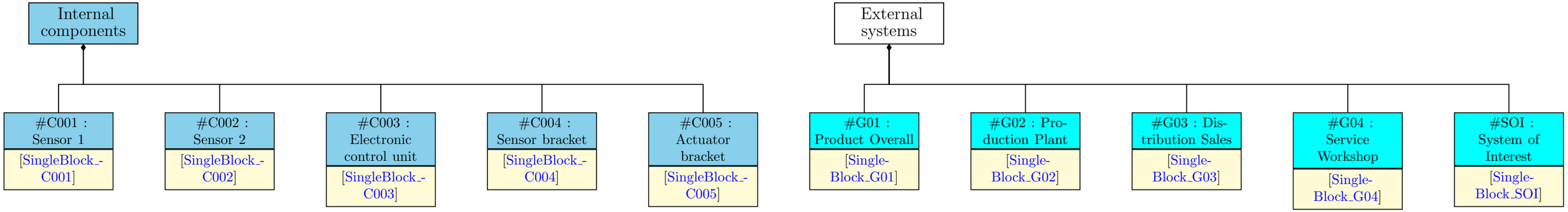

The Product Breakdown Structure contains all the components defined for the system as well as external contributing ystems.